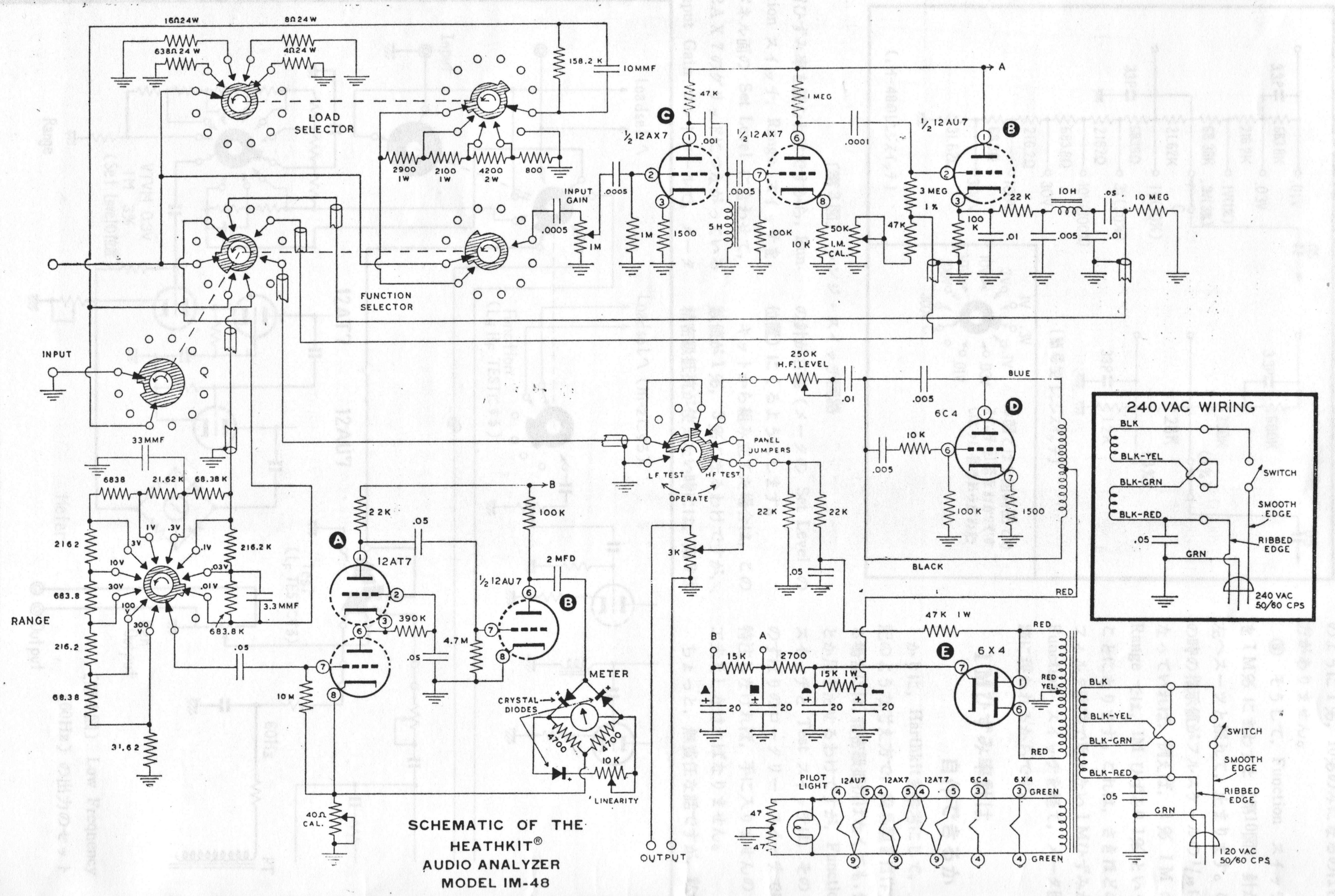

SCHEMATIC OF THE HEATHKIT® AUDIO ANALYZER MODEL IM-48